Truck-Mounted Platforms

PL 300 D

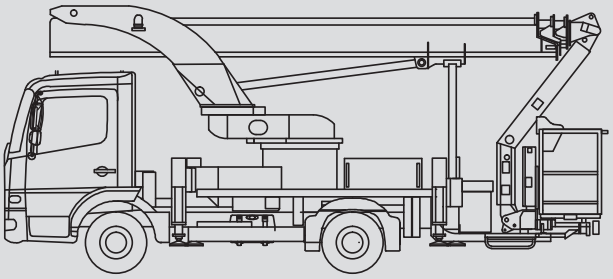

Max. working height	30,00 m
Max. platform height	28,00 m
Capacity	350 kg
Max. horizontal reach	20,50 m
Width	2,50 m
Length	7,45 m
Height	3,50 m
Platform dimensions	1,00 x 1,80 m
Max. outrigger width	5,00 m
Variable jacking	Yes
Weight	7.310 kg
Four wheel	No
Driving licence	C

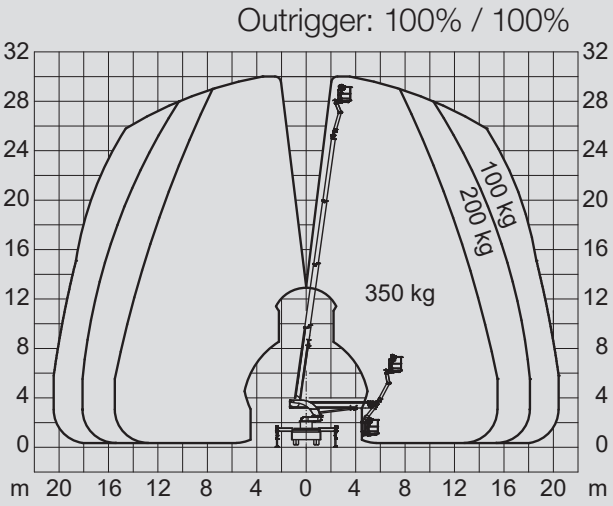

For further information please contact your sales representative or one of our local depots.

Data provided are for information only and do not imply any obligation. Technical information as provided by the manufacturer. We reserve the right to modify specifications and/or models without notice.

Prangl Gesellschaft m.b.H. | Mobile Cranes | Heavy Duty Transportation | Aerial Work Platforms | Telehandlers | Heavy Lifting & Moving

A-1230 Wien
Josef-Prangl-Straße 8
Tel.: +43 (0)5 0995
Fax: +43 (0)5 0995-11033
wien@prangl.at

A-8141 Premstätten
Josef Prangl Straße 1
Tel.: +43 (0)5 0995
Fax: +43 (0)5 0995-12018
premstaetten@prangl.at

A-4490 St. Florian
Tagerbachstraße 1
Tel.: +43 (0)5 0995
Fax: +43 (0)5 0995-13020
stflorian@prangl.at

A-3100 St. Pölten
Keilweg 5
Tel.: +43 (0)5 0995
Fax: +43 (0)5 0995-14010
stpoelten@prangl.at

A-9130 Poggersdorf
Landesstraße 12
Tel.: +43 (0)5 0995
Fax: +43 (0)5 0995-15050
poggersdorf@prangl.at

A-6220 Buch/Tirol
St. Margarethen 152 d
Tel.: +43 (0)5 0995
Fax: +43 (0)5 0995-16010
buch@prangl.at

HU-1239 Budapest
Ócsai út 5.
Tel.: +36 1 289 49 00
Fax: +36 1 289 49 01
office@prangl.hu

SI-2311 Hoče
Miklavška cesta 82
Tel.: +386 (0)2 613 09-20
Fax: +386 (0)2 613 09-25
office@prangl.si

HR-10255 Donji Stupnik
Stupničke Šipkovine 10
Tel.: +385 (0)1 556 56 93
Fax: +385 (0)1 556 56 92
office@prangl.hr

BA-71000 Sarajevo
Ulica Envera Šehovića Br. 34
Tel.: +386 2 613 09-20
Fax: +386 2 613 09-25
office@prangl.ba

RS-11000 Beograd
Makedonska 30/III, Stari grad
Tel.: +386 2 613 09-20
Fax: +386 2 613 09-25
officese@prangl.rs

Outrigger: 100% / 100%

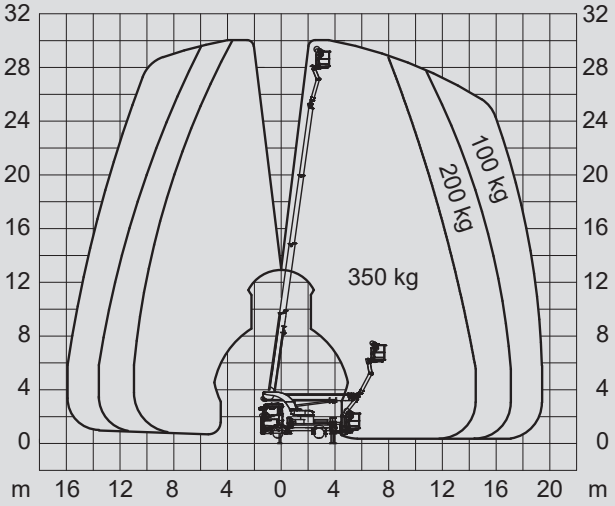

Outrigger: 100% / 100%

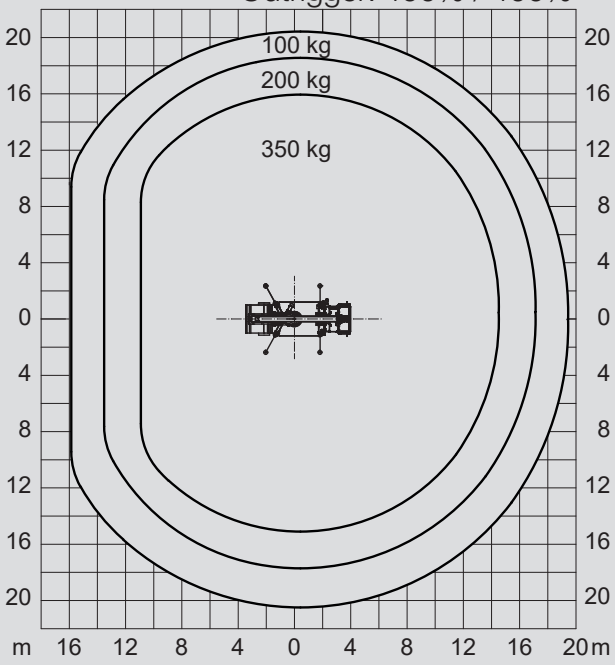

Outrigger: 0% / 0%

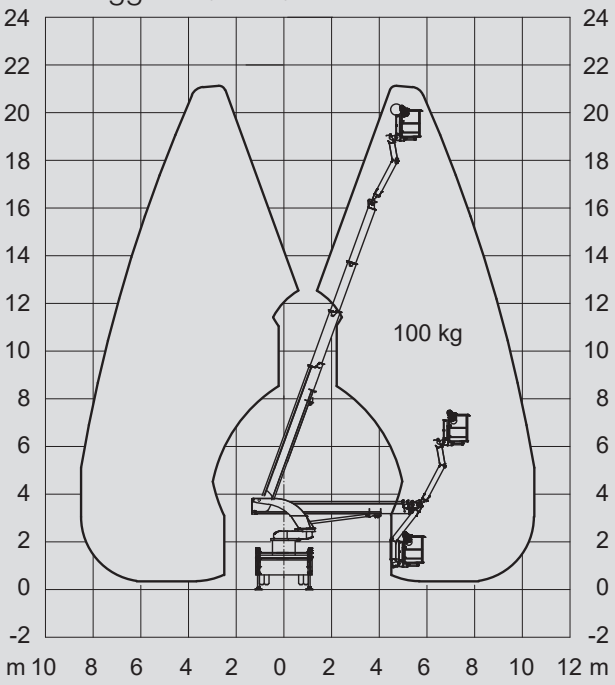

Outrigger: 0% / 0%

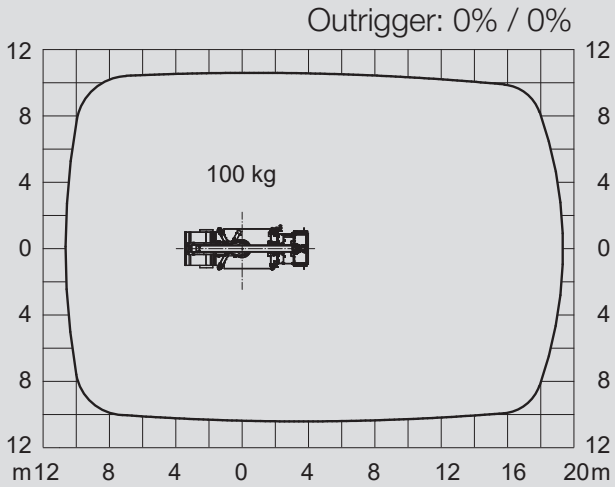

For further information please contact your sales representative or one of our local depots.

Data provided are for information only and do not imply any obligation. Technical information as provided by the manufacturer. We reserve the right to modify specifications and/or models without notice.

Prangl Gesellschaft m.b.H. | Mobile Cranes | Heavy Duty Transportation | Aerial Work Platforms | Telehandlers | Heavy Lifting & Moving

A-1230 Wien
Josef-Prangl-Straße 8
Tel.: +43 (0)5 0995
Fax: +43 (0)5 0995-11033
wien@prangl.at

A-8141 Premstätten
Josef Prangl Straße 1
Tel.: +43 (0)5 0995
Fax: +43 (0)5 0995-12018
premstaetten@prangl.at

A-4490 St. Florian
Tagerbachstraße 1
Tel.: +43 (0)5 0995
Fax: +43 (0)5 0995-13020
stflorian@prangl.at

A-3100 St. Pölten
Keilweg 5
Tel.: +43 (0)5 0995
Fax: +43 (0)5 0995-14010
stpoelten@prangl.at

A-9130 Poggersdorf
Landesstraße 12
Tel.: +43 (0)5 0995
Fax: +43 (0)5 0995-15050
poggersdorf@prangl.at

A-6220 Buch/Tirol
St. Margarethen 152 d
Tel.: +43 (0)5 0995
Fax: +43 (0)5 0995-16010
buch@prangl.at

HU-1239 Budapest
Ócsai út 5.
Tel.: +36 1 289 49 00
Fax: +36 1 289 49 01
office@prangl.hu

SI-2311 Hoče
Miklavška cesta 82
Tel.: +386 (0)2 613 09-20
Fax: +386 (0)2 613 09-25
office@prangl.si

HR-10255 Donji Stupnik
Stupničke Šipkovine 10
Tel.: +385 (0)1 556 56 93
Fax: +385 (0)1 556 56 92
office@prangl.hr

BA-71000 Sarajevo
Ulica Envera Šehovića Br. 34
Tel.: +386 2 613 09-20
Fax: +386 2 613 09-25
office@prangl.ba

RS-11000 Beograd
Makedonska 30/III, Stari grad
Tel.: +386 2 613 09-20
Fax: +386 2 613 09-25
officese@prangl.rs